HORIZONTAL AIR RECEIVERS WITH EXTENDED TOPPLATE

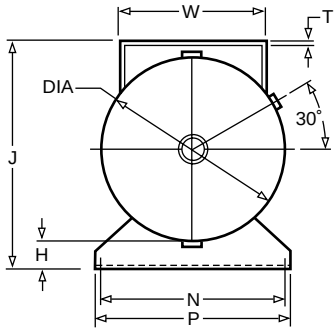

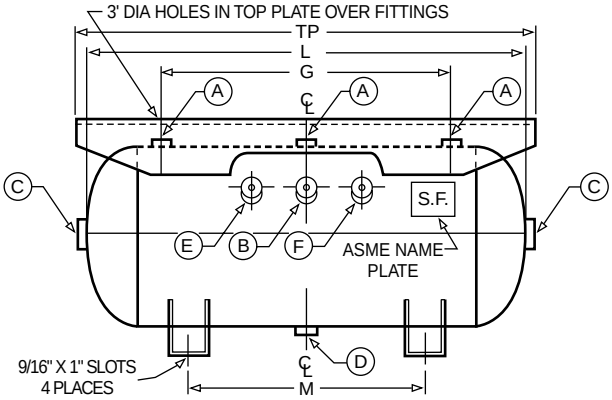

				OPENINGS (NPT)"							DIMENSIONS "							
P/N	GAL	DIA	L	J	A	B	C	D	E	F	G	TP	W	T	M	N	P	H
A10136	30	16	38	20	3/4	1/4	1-1/2	1/4	3/8	1/4	26-1/2	40	12	3/16	22	15	19	2-1/2
A10137	60	20	48	25-1/2	3/4	1/4	2	1/2	3/8	1/4	31-1/2	50	16	1/4	26	18-3/4	21	3-3/16
A10138	80	20	63	25-1/2	1-1/4	1/4	2	3/4	3/8	1/4	45	66	16	1/4	36	18-3/4	21	3-3/16
A10139	120	24	69	29-13/16	2	1/4	2	3/4	3/8	1/2	48	74	16	1/4	42	23-3/4	26-1/2	3-1/2
A10140	200	30	72	36-1/2	2	1/4	2	1	3/8	1/2	48	86	18	1/4	42	27-1/2	30	4
A10141	240	30	84	36-1/2	2	1/4	2	1	3/8	1/2	61	96	18	1/4	54	27-1/2	30	4

HORIZONTAL WITH PEDESTAL FEET - LESS TOPPLATE

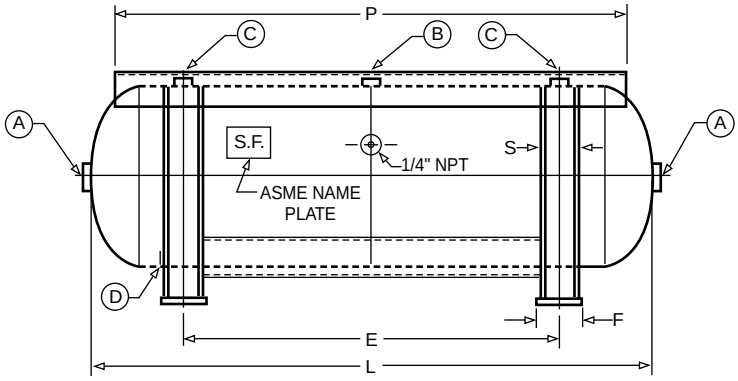

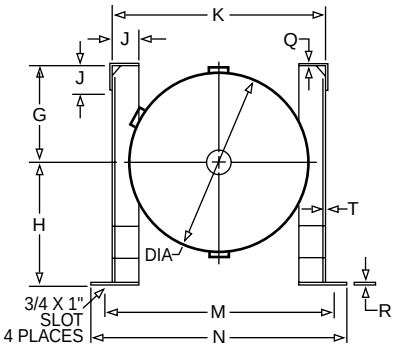

				OPENINGS (NPT)"					DIMENSIONS "											
P/N	GAL	DIA	L	A	B	C	D	E	F	G	H	J	K	T	M	N	P	Q	R	S
A10123	30	16	38	1-1/2	1-1/2	1/2	1/4	22	4	9	12	2.63	19.31	.134	22	24.5	31	.135	.25	3
A10124	60	20	48	2	1-1/2	1-1/2	1/2	27	5	11	14	3.19	24.38	.135	26	28.5	42	.188	.25	4
A10125	80	20	63	2	1-1/2	1-1/2	3/4	42	5	11	14	3.19	24.38	.135	26	28.5	57	.188	.25	4
A10126	120	24	69	2	1-1/2	1-1/2	3/4	42	7	13	16	4.19	30.38	.188	32	34.5	61	.188	.38	6
A10127	200	30	72	2	1-1/2	1-1/2	1	42	10	16	19	5.25	36.5	.188	40	42.5	60	.25	.5	9
A10128	240	30	84	2	1-1/2	1-1/2	1	54	10	16	19	5.25	36.5	.188	40	42.5	72	.25	.5	9

GASOLINE DRIVEN UNITS

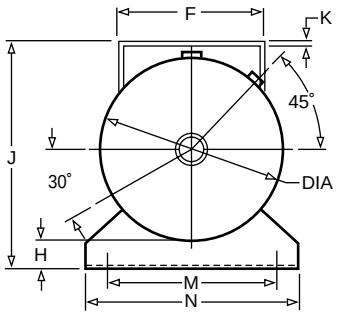

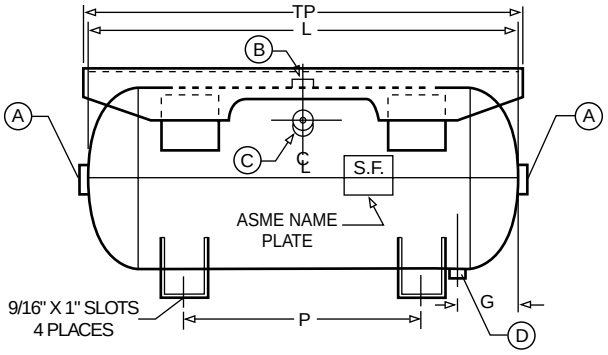

				OPENINGS (NPT)"				DIMENSIONS "									
P/N	GAL	DIA	L	A	B	C	D	F	G	H	J	K	L	M	N	P	TP
A10039	30	16	38	1-1/2	3/4	1/4	1/4	13	5-1/2	2-1/2	20	1/4	38	15	19	20-3/4	38-1/2